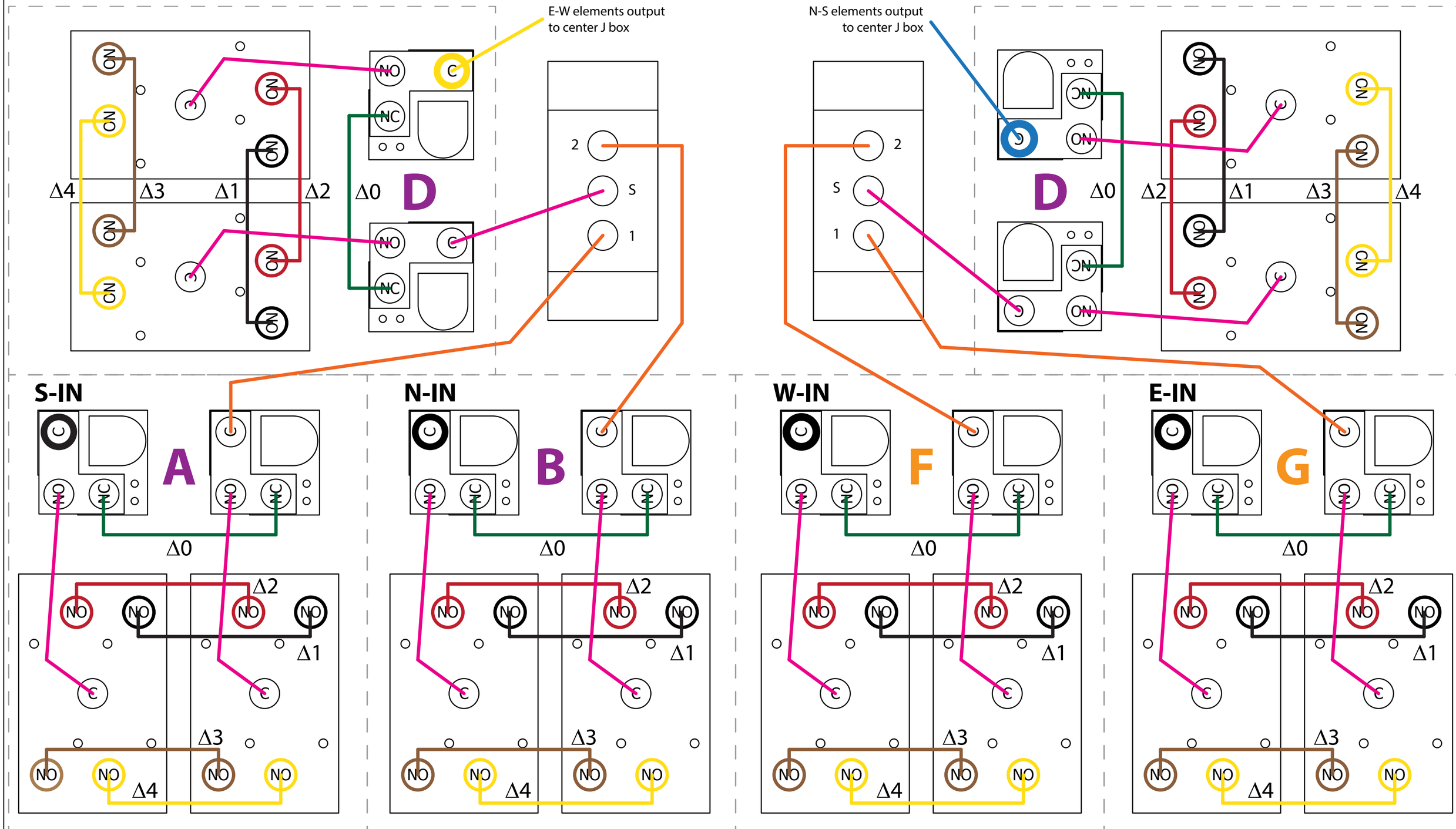

NOTES:
1) Amphenol coils prox 270Ω, rated for 26 VDC (96 mA).
2) SPDT relay mounting holes 4-40, 7/32" apart.
3) SP4T relay mounting holes 6-32, 0.95" apart X, 1.25" apart Y.
4) Omron coils prox 360Ω (12V, 33 mA) or 1440Ω (24V, 17 mA).

AJ4CO OBSERVATORY

Junction Box - N - Mechanical			
SIZE A	DATE 12-OCT-2014	DRAWN BY DAVE TYPINSKI	REV A
SCALE 1:1	NJBM-01	SHEET 2 OF 1	